CRAY JULIET BALCONY

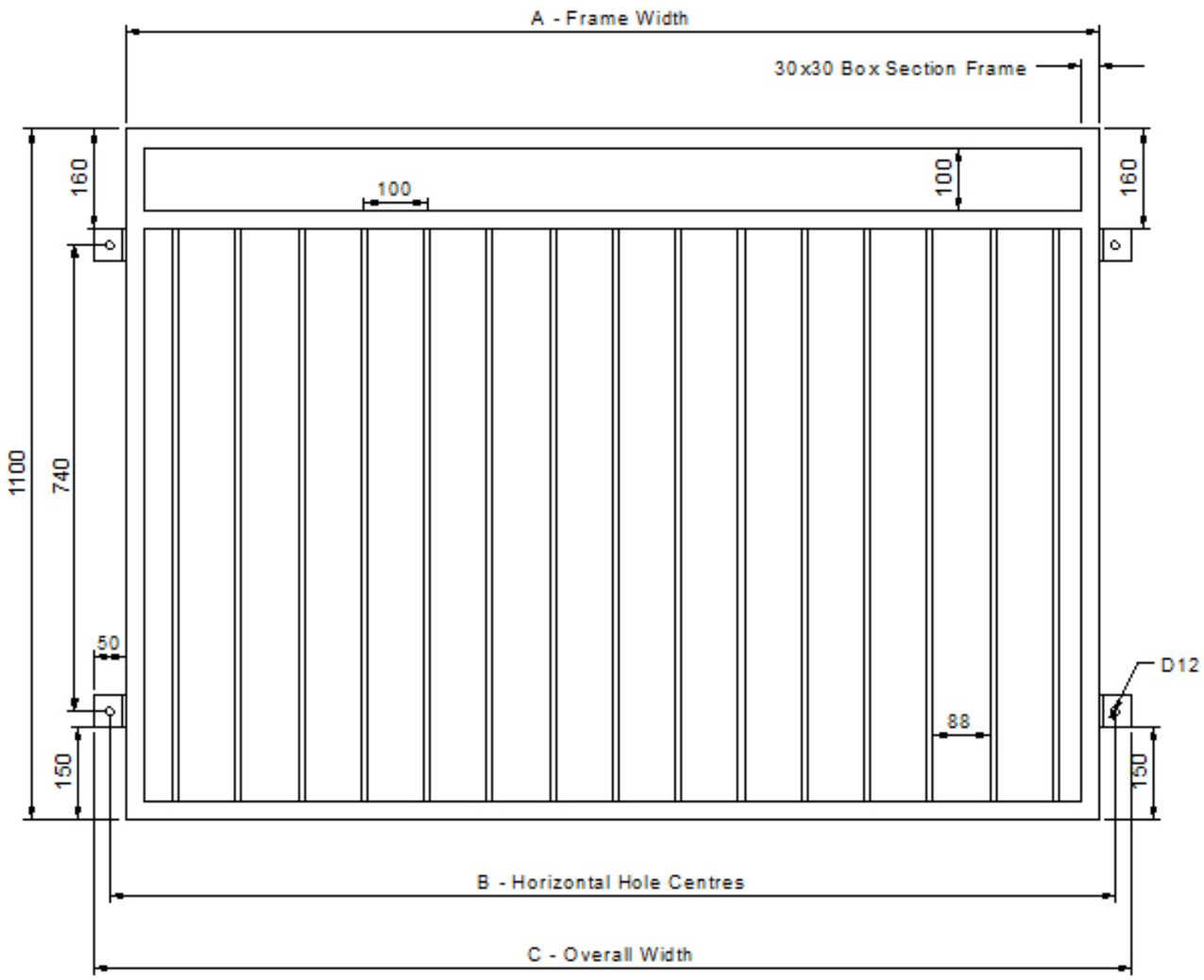

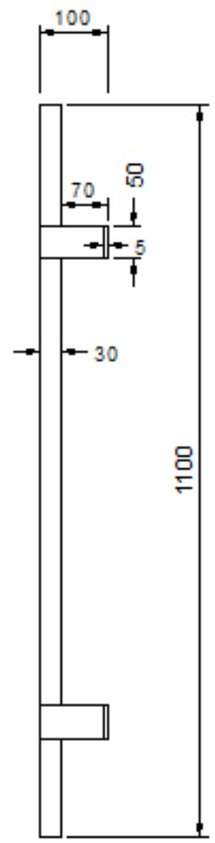

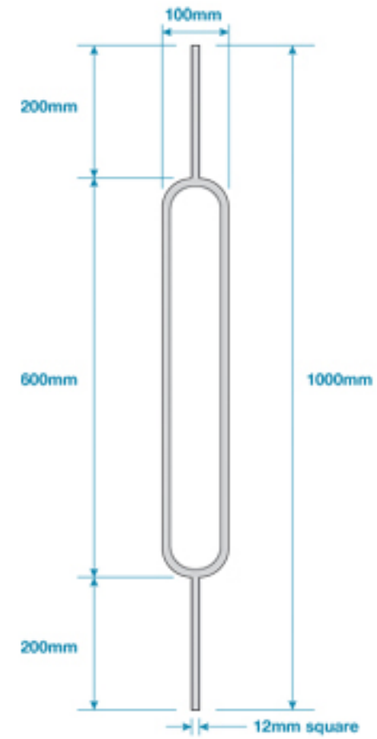

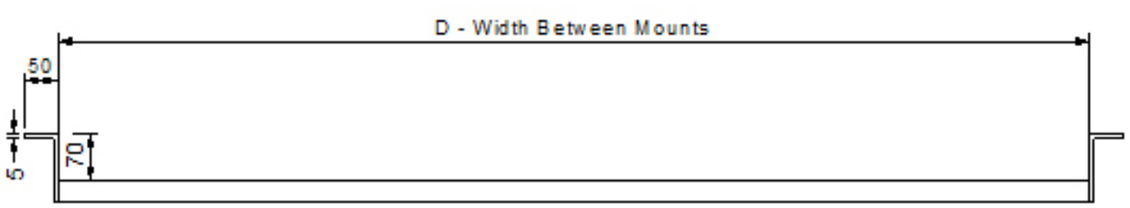

Cray Balcony Dimensions in M.M

BALCONY WIDTH in mm	DIM A	DIM B	DIM C	DIM D
1100	1100	1150	1200	1000
1200	1200	1250	1300	1100
1300	1300	1350	1400	1200
1400	1400	1450	1500	1300
1500	1500	1550	1600	1400
1600	1600	1650	1700	1500
1700	1700	1750	1800	1600
1800	1800	1850	1900	1700
1900	1900	1950	2000	1800
2000	2000	2050	2100	1900
2100	2100	2150	2200	2000
2200	2200	2250	2300	2100
2300	2300	2350	2400	2200
2400	2400	2450	2500	2300
2500	2500	2550	2600	2400

COPYRIGHT - IRON OCTOPUS LTD - 2025